EXPANSION MODULE

"IM" OPERATION MANUAL

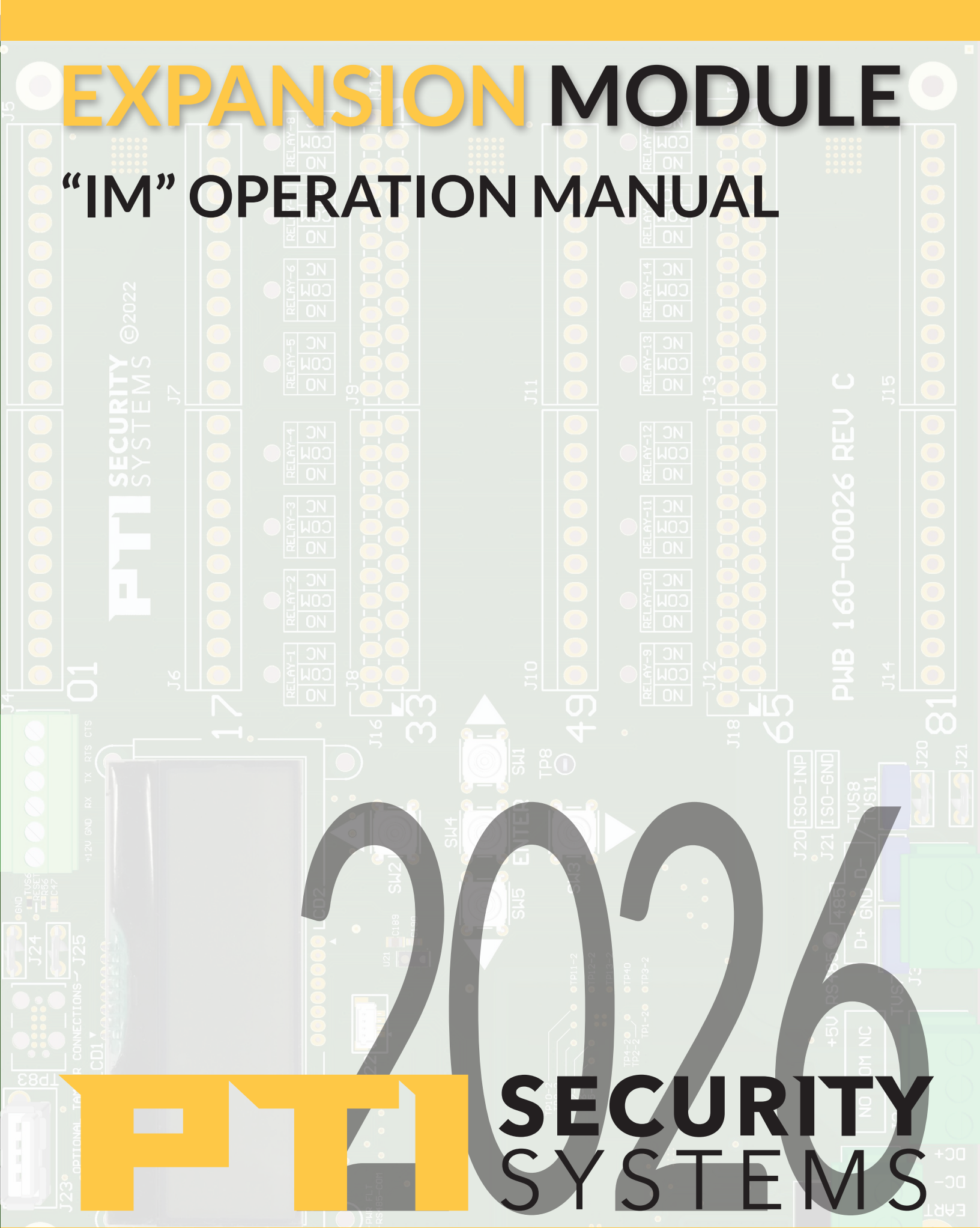

2026

PTI SECURITY SYSTEMS

EXPANSION MODULE

"IM" OPERATION MANUAL

TABLE OF CONTENTS

Introduction & Specifications 3
Overview 4
Mounting 4
Wiring 5
- Cable and Wiring 5
- Power 5
- RS 485 Communication 5

Input Wire Connections 6
- Input Wire Splices 6

Connecting the Switches 7-8
- Relay Output 8
- Menus 9-10
- Settings Menu 10-11

Warranty & Disclaimer 11-12

REGULATORY

US-FCC Class A Digital Devices FCC Compliance Statement:

This equipment has been tested and found to comply with the limits for a Class A digital device, pursuant to part 15 of the FCC Rules. These limits are designed to provide reasonable protection against harmful interference when the equipment is operated in a commercial environment. This equipment generates, uses, and can radiate radio frequency energy and, if not installed and used in accordance with the instruction manual, may cause harmful interference to radio communications. Operation of this equipment in a residential area is likely to cause harmful interference in which case the user will be required to correct the interference at his own expense.

EXPANSION MODULE

"IM" OPERATION MANUAL

INTRODUCTION

The IM (Input Multiplexer) is an RS-485 peripheral module used with the StorLogix Access Control System to provide dry-contact input monitoring. It expands system capability by adding monitored switch inputs. Common applications include monitoring roll-up door position (open/closed), door latch position (locked/unlocked), and other devices that present a dry-contact output such as, a motion detector configured with a relay contact.

The IM is available in three versions: IM-96, IM-64, and IM-32, supporting 96, 64, and 32 inputs, respectively.

An onboard LCD and five-button keypad provide local configuration and status display.

Optional end-of-line (EOL) supervision is an IM-wide feature that uses a 4.7 kΩ series resistor. When enabled, the IM can detect tamper conditions such as a short across the input wiring preventing bypassing of the system. Other notable features:

- Wide DC input voltage range that allows use with 24V battery backed supplies. This results in lower IR cable loss resulting in much longer power supply to device cable lengths.
- The RS485 Interface provides 2500 Volts of isolation and state of the art surge protection.
- State of the art power input surge protection with 1.5K Volts of isolated power
- Integrated voltmeter for monitoring input power and detecting brown out conditions and surge events.
- Dual mode tamper detection for security and reliability.
- Remote firmware update capability
- Remote configuration capability

SPECIFICATIONS

Item	Specification
Power	12 to 24 VDC, 100 mA. A Class 2 Power supply must be used. The DC input must be separated from the mains by double insulation or reinforced insulation.
Communication Interface	RS-485
Input Type	Dry contact inputs
Relay Output	1 relay output (NO/NC contacts); used to operate an optional siren; 2 A at 30 VDC max (resistive load)
EOL Supervision (Optional)	IM-wide; 4.7 kΩ series resistor
Models	IM-96 (96 inputs), IM-64 (64 inputs), IM-32 (32 inputs)
Operating Temperature	-40°C to 85°C
Humidity	0 to 85% non-condensing
Ingress Protection	IP54
Weight	1.1 kg

EXPANSION MODULE

“IM” OPERATION MANUAL

› MOUNTING

OVERVIEW

The IM-96 has six rows of input connectors. The IM-64 has four and the IM-32 has two. Each product includes an LCD and pushbuttons for setup and testing, connections for power, an alarm relay to control a siren, RS485 communication and a sensor for detecting removal of the cover for tamper detection.

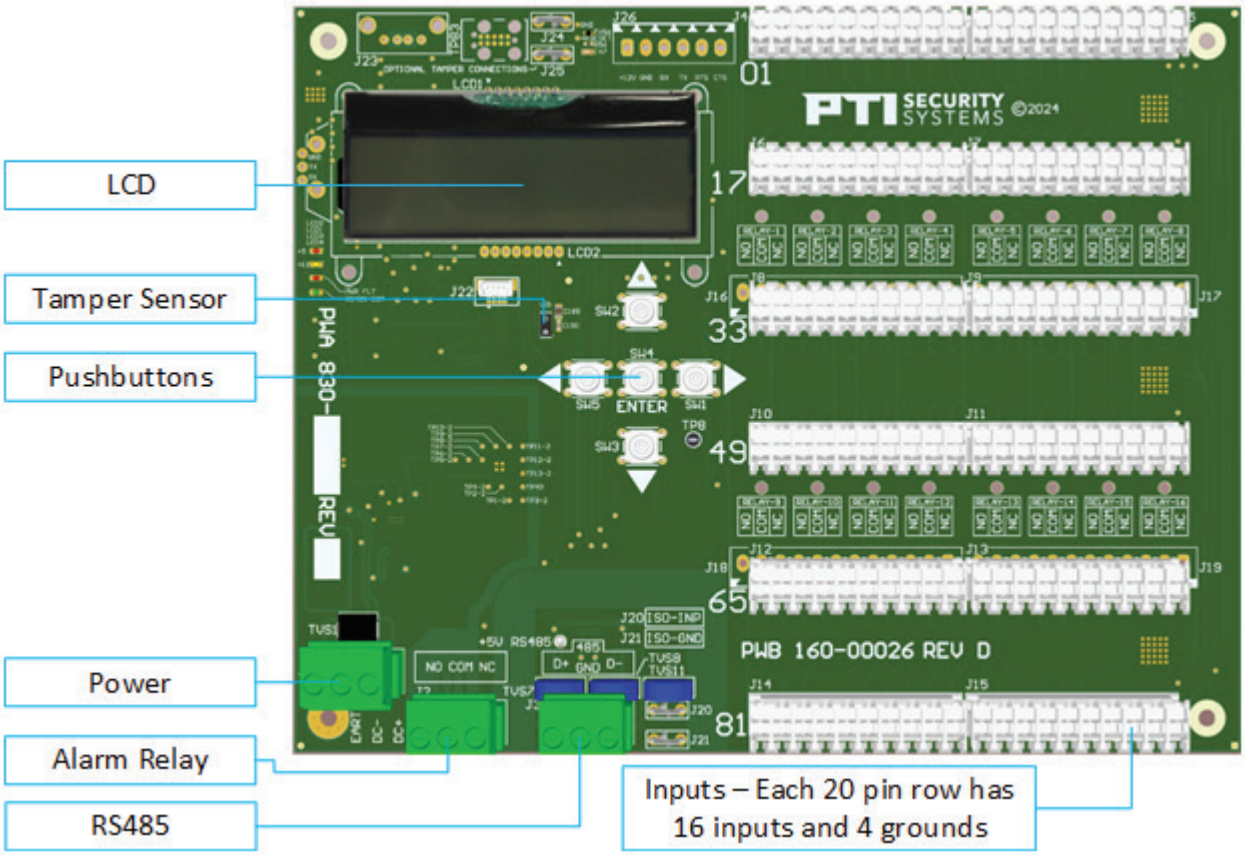

MOUNTING

- Open the multiplexer by removing the two stainless steel button-head machine screws on the front of the housing using the hex key provided with the unit. Slide the front faceplate down and off the housing.
- Note: To view the label on the inside of the faceplate during installation, temporarily reattach the faceplate upside down using the two stainless This also keeps the faceplate secure while work is performed on the unit.
- Determine a mounting location that is accessible for maintenance and service, but inconvenient for tampering. Consider the conduit attachment points and cable routing.
- Determine conduit attachment locations and remove the knockouts on the back or bottom of the housing. These knockouts allow installation of ¾-inch or 1-inch conduit with compression fittings.
- Mount at the desired location using four screws (not supplied).
- The enclosure is provided with four (4) mounting holes of 3/16 in (4.8 mm) diameter.
- Appropriate fasteners shall be selected based on the mounting surface as follows:
  - Imperial: #10 screws
  - Metric: M5 screws

- Fasteners may include self-tapping screws (for sheet metal), wood screws (for timber), or machine screws with appropriate mating hardware.
- The installer shall ensure the selected fasteners provide secure mechanical attachment and prevent loosening under normal mechanical stress and vibration
- The unit is weather-resistant and can be used in exterior installations. For exterior installations, seal around the back of each screw hole with an outdoor silicone sealant. Appropriate waterproof outdoor conduit fittings must be used for outdoor installations.

Note: When mounting outdoors the unit must be mounted vertically with the screws for the lid at the bottom.

WIRING

Cabling and Wire

The following cables are required for installation:

- Adequate 18 AWG, 4-conductor, shielded cable coming in from the controller or from the previous IM device in line. This cable is used for communication and power. Never use smaller than 18 AWG for power connections.
- Adequate single conductor wire suitable for an earth ground connection.
- Adequate 24 AWG, solid copper telephone trunk line cables used to connect the door switches. This cable can be purchased in 10-pair and 25-pair options which are well suited to the installation.
- One 2-conductor cable coming from the siren (optional)

Power

Connect a current limited 12 to 24 VDC power source to the IM. Ensure the supply can provide at least 100 mA for the IM (plus any additional load if an external siren or other accessories are powered from the same supply).

Tip: The Status Menu can be used to monitor input voltage. See Menus.

Note: DC- and Earth ground should not be connected. Earth ground provides a surge path for surges occurring on DC- and DC+ and ground the chassis.

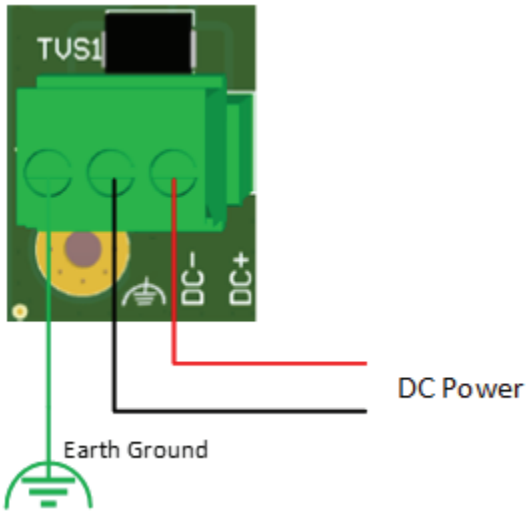

RS-485 Communications

Wire the IM to the StorLogix controller using the RS-485 bus conductors (A/B or D+/D−, per site convention).

Tip: The Status Menu can be used to monitor RS485 communication. See Menus.

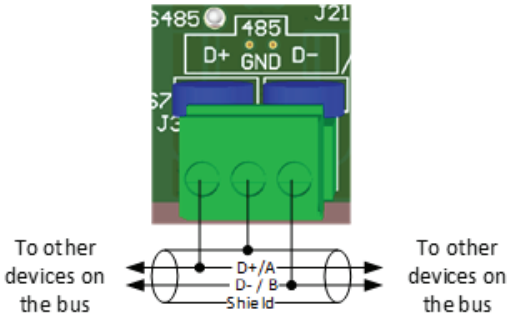

› CONNECTIONS

INPUT WIRE CONNECTIONS

Input Wire Installation

An insulation displacement connector type is used to install the 24AWG wire into the input connectors. Do not strip the wire before installing. The process uses the supplied insertion tool, sometimes called a "punch down tool".

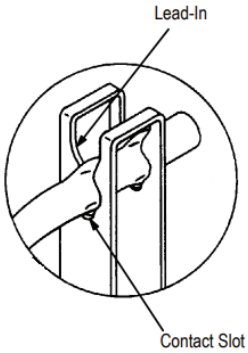

The illustration to the right shows just the contact with a wire installed. The wire is first laid in the lead-in area and then pushed down into the contact slot using the supplied insertion tool. The contact slot cuts through the insulation and makes electrical contact with the wire.

It is very important to use the supplied tool when installing the wires. A screwdriver or knife blade will damage connector contacts resulting in an unreliable connection.

Connect the wires using the supplied insertion tool as shown below:

Step 1:

Lay the individual wires in the lead in area of the desired contact. The illustration shows two wires.

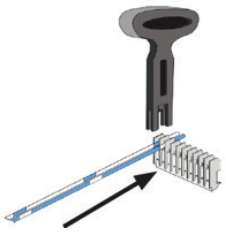

Step 2:

Using the supplied installation tool, align it with the lead in slot and press firmly until the wire is within the contact slot. Repeat this step for each wire.

After insertion, excess wire can be trimmed off.



Note that the above process can be performed without removing the connectors from the circuit board.

Input Wire Splices

The insulation displacement connectors require 24AWG solid wire, so when attaching the switch, the GEL filled insulation displacement connectors should be used. These connectors accept a wider range of wire gauges so reliable slices can be formed between the switch wire and the 24AWG solid wire. When ordering, mind the wire gauge and types that the connector accepts. They are available from multiple manufacturers. Splices using wire nuts or simply twisting the wires is not recommended.

› CONNECTIONS

CONNECTING THE SWITCHES

The following are a few examples of connecting the switch to the input connector.

Note: For each input connector row, the first sixteen pins are input channels, and the last four pins are common connections for these input channels. These common connections are isolated from the power supply ground or earth ground and should not be connected to either.

Tip: The IO Status menu can be used to monitor input states. See Menus.

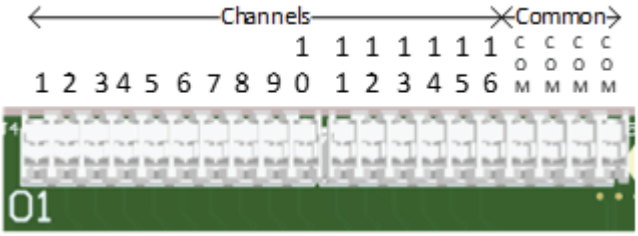

Input wiring shows 4 dry contact switches wired from Channels 1 to 4.	Input wiring shows 4 dry contact switches with supervision wired from Channels 1 to 4. Note that if supervision is used, it must be used on all channels.	Input wiring shows 4 dry contact switches wired from Channels 1 to 4 all sharing a single common pin 13. Four common pins are provided for each group of 16 input
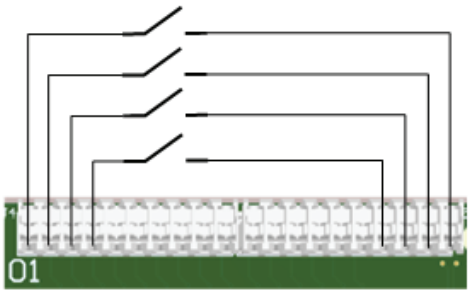	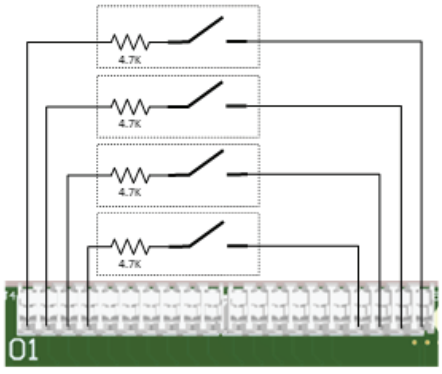	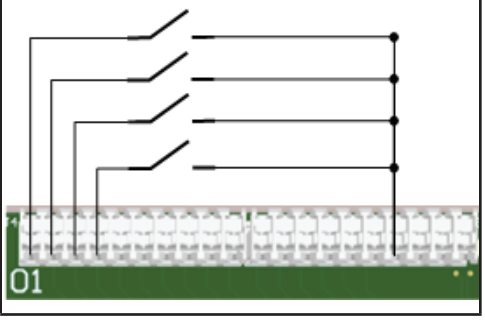

RELAY OUTPUT (OPTIONAL SIREN)

The IM includes one relay output with NO and NC contacts for operating an optional siren. Relay contacts are rated 2 A at 30 VDC maximum (resistive load). The siren can be tested using the Relay Control Menu.

Tip: The Relay Control Menu can be used to test the relay. See =Menus.

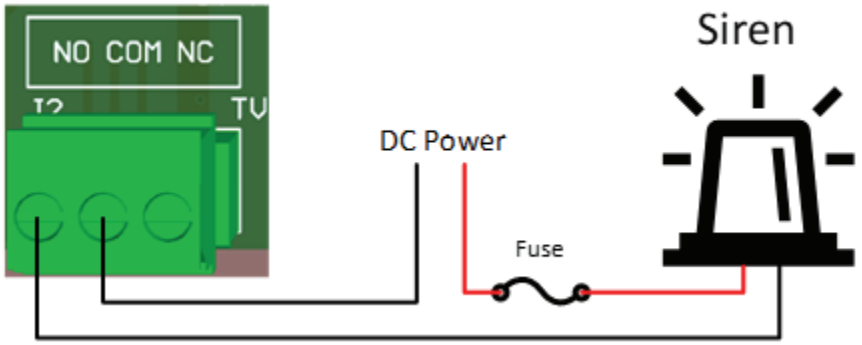

Initial checkout

Power Unit	• Confirm the IM powers up normally. After power is applied, the +5, +12 and +5V RS485 LEDS should be lit. • The LCD should display the Information menu and show the IM’s part number, IM-CD-000-XX-00, where XX indicates the number of channels, 32, 64, or 96. • It is recommended to cycle through the information menu and confirm the input voltage. • If the voltage ever drops below ~11V DC, or the unit experiences a surge event, the PWR FLT led will flash. Remove reset this indicator in the Settings Menu.
Configure Unit (Locally)	Using the Settings menu, cycle through and verify you have the desired configuration. The device’s RS485 address must be set and must be unique to other devices on the network.
Configure Unit in StorLogix	• If the unit is connected to a power controller that has Internet access, configure StorLogix by adding the appropriate device in the Devices screen in Setup. • Assign the inputs to the unit using Mux & Channels screen in Setup.
Verify Communications	If the unit is connected to a powered controller and it is properly configured, the unit should come online. The RS485-COM LED will flash each time the unit is polled by the controller. The communication status can be verified in the Information Menu which will show the state and indicate if there are RS485 framing errors.
Check Siren	If an optional siren is connected, verify its operation using the Relay Control menu.
Test Inputs	Open and close each door and verify proper reporting. This can be done locally using the Event Menu or the IO Status Menu. See Menus.
Test Alarms	If the optional alarm is installed, create an alarm event and verify siren operation.

MENUS

The Left and Right Arrows buttons navigate between menu selections Info, Settings, Events, IO Status and Relay Control.

Use the ENTER button to enter the menu. The lower line on the display will show instructions.
To exit the menu, use the Left and Right Arrow buttons.

The following is an example of setting the address and turning input supervision on.

1. Use the left or right arrow to navigate to the settings menu.
2. Press ENTER.
3. Display shows address. Press up and down buttons to select desired address.
4. Press Enter. This action saves the address setting and cycles to the next setting, baud. If a setting does not need changing, simply press enter to cycle to the next setting.
5. Press ENTER until you see the Input Supervision setting.
6. Press the Up or Down button to change the setting. Change it to show 'on'.
7. Press ENTER to save your change.
8. When no more settings changes are required, press the left or right arrow to return to menu selection.

Menu Description

Information	This is the default start menu that appears at power up or when there has been no interaction with the menus for 8 hours. Its purpose is to quickly show communication status and settings and indicate any communication or power errors. Use the enter key on this menu for additional details about the unit. Comm: • OFFLINE – unit does not detect any RS485 activity. • ONLINE – unit is communicating with controller. • NO ADDRESS - the unit sees proper RS485 communication but does not have an address set. • NOT POLLED – the unit sees proper RS485 communication, but its address is not being polled by the controller. Address: Displays the currently selected address. Baud: Displays the currently selected baud rate. The following will be displayed if they apply: • ERRORS – the unit is detecting RS485 errors. • POWER FAULT – the unit detected an out-of-range input voltage.

› SETTINGS

Settings	Pressing ENTER will cycle through all the application configuration settings. The up and down keys change the setting. If a setting has changed, pressing ENTER will apply it. If you change it and don't want to apply it, exit the menu with the left and right keys. The settings are described below.
Events	Pressing ENTER will show the latest event. The display is updated each time a new event occurs. When displaying events, the top line is the date and time of the event. The UP and DOWN buttons allow you to view the event history. Once you press UP or DOWN the last 64 events are captured and can be viewed with the UP and DOWN keys. No new events will be shown. The top line of the display will cycle between event date and event depth. Pressing ENTER will bring you back to the latest event, LEFT or RIGHT to exit the menu.
IO Status	Pressing ENTER will show the input status of the first 16 inputs. Pressing the up or down keys cycle through all the inputs in groups of 16 and all the relay states. Every unit has an alarm relay which is always channel 0.
Relay Control	Pressing ENTER will show Relay 0. If ENTER is pressed the unit will switch the state of the relay. Pressing up and down will cycle through all available relays. When a relay state is changed, it will remain in that state until power is cycled, or the controller sends a command for that relay through RS485.

Settings Menu
The following describes each configurable parameter in the settings menu and what products they apply to.

Menu Item	Description
Set Address	Sets the RS485 address. Each address on the network must be unique. If the address is set to zero the IM will not respond and takes it to an off-line state.
Set Baud	Sets the baud rate. Presently, only 9600 baud is supported. A baud rate of '0' is used for automatic baud detection. Using automatic baud detection will delay the unit's response to the controller while it is determining the baud rate.
Tamper	Enable or disable the proximity / optical tamper on the unit. When enabled, a tamper event will occur when the cover is removed from the unit. The tamper must secure (cover installed) for 25 seconds before reporting secure.
Alarm Relay	Enables the Alarm relay (Relay 0). When enabled, the unit will activate the relay when it receives a global alarm command over RS485 and activate the relay when a local alarm event occurs even when there is no RS485 communication. The unit tamper and input tampers, if enabled, are sources of local alarm triggers.
Alarm Time	Defines the time that the alarm relay is active for local alarm events. The alarm time for global alarms is determined by the controller. A value of 0 activates the alarm relay until it is reset manually or by the controller.
Time	Switches between 24-hour and 12-hour time format when events are displayed.

Input Super	Enables input supervision. When enabled, the unit expects to see a minimum of 4.7 kΩ between the input and common when the switch is closed. Lower values cause a tamper event indicating the switch input has been shorted to common. Used to detect tampering of the switch contacts.
Filter	Adds additional filtering to the inputs. Use to eliminate false readings from electrical noise coupled to the inputs. Will add some lag in the reporting of input state changes.
Restore Defaults	Restores all settings to the factory defaults.

WARRANTY & DISCLAIMER

PTI Security Systems warrants its products and equipment to conform to its own specifications and to be free from defects in materials and workmanship, under normal use and service, for a period of two years from the date of shipment. Within the warranty period, PTI Security Systems will repair or replace, at its option, all or any part of the warranted product which fails due to materials and/ or workmanship. PTI Security Systems will not be responsible for the dismantling and/or re-installation charges. To utilize this warranty, the customer must be given a Return Materials Authorization (RMA) number by PTI Security Systems. The customer must pay all shipping costs for returning the product.

This warranty does not apply in cases of improper installation, misuse, failure to follow the installation and operating instructions, alteration, abuse, accident, tampering, natural events (lightning, flooding, storms, etc.), and repair by anyone other than PTI Security Systems.

This warranty is exclusive and in lieu of all other warranties, expressed or implied, including but not limited to the implied warranties of merchantability and fitness for a particular purpose. PTI Security Systems will not be liable to anyone for any consequential or incidental damages for breach of this warranty or any other warranties.

This warranty will not be modified or varied. PTI Security Systems does not authorize any person to act on its behalf to modify or vary this warranty. This warranty applies to PTI Security Systems products only. All other products, accessories, or attachments used in conjunction with our equipment, including batteries, will be covered solely by their own warranty, if any. PTI Security Systems will not be liable for any direct, incidental, or consequential damage or loss whatsoever, caused by the malfunction of product due to products, accessories, or attachments of other manufacturers, including batteries, used in conjunction with our products. This warranty does not cover the replacement of batteries that are used to power PTI Security Systems products.

The customer recognizes that a properly installed and maintained security system may only reduce the risk of events such as burglary, robbery, personal injury, and fire. It does not ensure or guarantee that there will be no death, personal damage, and/or damage to property as a result. PTI Security Systems does not claim that the Product may not be compromised and/or circumvented, or that the Product will prevent any death, personal and/or bodily injury and/or damage to property resulting from burglary,

robbery, fire, or otherwise, or that the Product will in all cases provide adequate warning or protection. PTI Security Systems products should only be installed by qualified installers. The customer is responsible for verifying the qualifications of the selected installer.

PTI Security Systems shall have no liability for any death, injury, or damage, however incurred, based on a claim that PTI Security Systems Products failed to function. However, if PTI Security Systems is held liable, directly or indirectly, for any loss or damage arising under this limited warranty or otherwise, PTI Security Systems's maximum liability will not in any case exceed the purchase price of the Product, which will be fixed as liquidated damages and not as a penalty, and will be the complete and exclusive remedy against PTI Security Systems.
Warning: The User should follow all installation, operation, and maintenance instructions. The User is strongly advised to conduct Product and systems test at least once each week. Changes in environmental conditions, electric or electronic disruptions, and tampering may cause the Product to not perform as expected.

Warning: PTI Security Systems warrants its Product to the User. The User is responsible for exercising all due prudence and taking necessary precautions for the safety and protection of lives and property wherever PTI Security Systems Products are installed. PTI Security Systems does not authorize the use of its Products in applications affecting life safety.

Notice. Some PTI Security Systems products use 900Mhz wireless technology. Other devices at the site such as cordless telephones or alarm components may cause interference that will disrupt the operation of the system or may be interfered with by the system. PTI Security Systems assumes no liability for any problems caused by interference. It is the sole responsibility of the user to identify and correct such problems.



SHAPING THE INDUSTRY SINCE 1979

Since 1979, PTI Security Systems™ has provided the self-storage industry with proven security and access control systems. Known for our complete and innovative solutions that deliver advanced and cost-effective security systems, self-storage owners and operators can efficiently manage their facility from anywhere, lower operating costs, and enhance the tenant experience.

For more information about PTI Security Systems or or our products, please contact a PTI representative or visit our website.

PTI is a trademark of Preferred Technology Systems, LLC

ptisecurity.com sales@ptisecurity.com 800.523.9504